MOVENTO with BLUMOTION – 760H | 766H

Web code
DQCZ3Y



- Concealed full extension
- Includes integrated, switchable **BLUMOTION S** damping effect for soft and effortless closing, and can be combined with **SERVO-DRIVE** or **TIP-ON BLUMOTION**
- Synchronised feather-light glide
- **BLUMATIC** self closing feature
- Tool-free side, height, and tilt adjustment
- Optional tool-free depth adjustment
- Built-in width and depth tolerance compensation

Space requirement

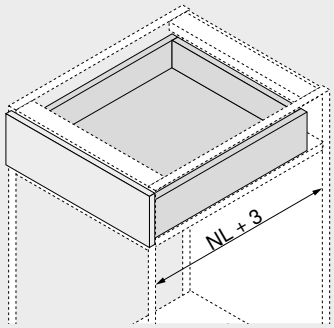

NL Nominal length

Order information

1 Runners left/right



Version	BLUMOTION S		
Nominal length NL (mm)	Dynamic carrying capacity (kg) 40	60	70
250[1]	760H2500S		
270	760H2700S		
300	760H3000S		
320	760H3200S		
350	760H3500S		
380	760H3800S		
400	760H4000S		
420	760H4200S		
450	760H4500S		766H4500S
480	760H4800S		
500	760H5000S		766H5000S
520	760H5200S		766H5200S
550	760H5500S		766H5500S
580			766H5800S
600	760H6000S		766H6000S
700		766H7000S	
750		766H7500S	
650			766H6500S

[1] Not compatible with TIP-ON BLUMOTION

3 Locking device left/right



Colour	Material	Part no.
Orange	Nylon/steel	T51.7601

Order left/right

Drawer

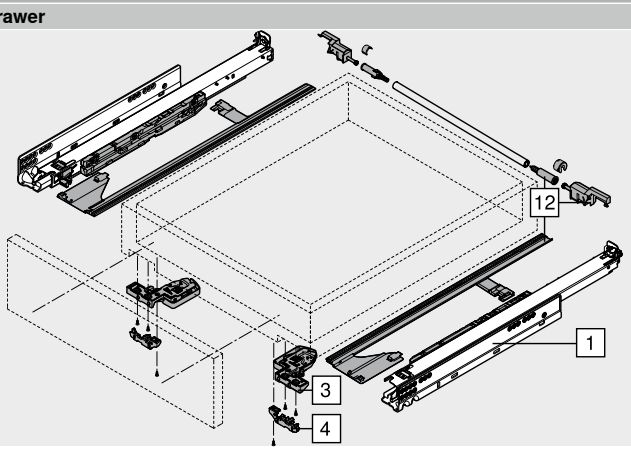

Accessories

4 Depth adjustment left/right



Colour	Material	Part no.
RAL 7037 dust grey	Nylon	298.7600

Only for inset applications
Integrated Blum distance bumper
Suitable for T51.7601 locking device

12 Side stabilisation set



Nominal length NL (mm)	Colour	Part no.
Up to 400		ZS7M400MU
Up to 600	RAL 7037 dust grey	ZS7M600MU
Up to 750		ZS7M750MU

For cutting to size
Suitable for cabinet width KB 1400 mm
Ideal for wide pull-outs with short nominal lengths