Wooden fronts and wide alu frames

Web code – click on the code or enter it in the Product Configurator: DQDXLC



- Cabinet height KH 480–1200 mm
- Cabinet width KB up to 1800 mm
- Internal cabinet depth LT min 264 mm
- Integrated **BLUMOTION** setting
- **SERVO-DRIVE** – electronic motion support system
- Variable stop
- Integrated opening angle stop
- Fixed position of the lift mechanism and front fixing brackets
- Tool-free assembly
- Two different types of lift mechanism assembly
- Centre hinge with finger safety feature
- The lever arm is available in nickel and eclipse black

Power factor LF
Front, symmetrical
Cabinet height KH (mm) x combined weight of top and bottom fronts FG including handle (kg)
Front, asymmetrical
Theoretical cabinet height TKH (mm) x combined weight of top and bottom fronts FG including handle (kg)
Theoretical cabinet height TKH
Upper front height FHo (mm) x 2 + gaps
The taller front must be at the top for asymmetrical applications!
We recommend the more powerful lift mechanism for overlapping areas!
A trial application is recommended when you are in a borderline area of the individual lift mechanism!

Order information

☐ Standard ■ SERVO-DRIVE

1 ☐■ Lift mechanism set

Fixing with pre-mounted system screws



Power factor LF	Opening angle OW[2]	Part no
2700–13500 [1]	81°–116°	22F2510
10000–19300		22F2810

Consisting of:
1 2 x Lift mechanism (symmetrical) Incl pre-mounted system screws

Note
The power factor LF can be increased by 50 % when a third lift mechanism is used.
[1] 1 pc LF 1350–3000 Cabinet width KB up to 600 mm
[2] Multi-stage adjustment

1 ☐■ Lift mechanism set

Fixing with chipboard screws with positioning system



Power factor LF	Opening angle OW[2]	Part no
2700–13500 [1]	81°–116°	22F2500
10000–19300		22F2800

Consisting of:
1 2 x Lift mechanism (symmetrical) Incl positioning system
– 8 x Chipboard screws Ø 4 x 35 mm

Note
The power factor LF can be increased by 50 % when a third lift mechanism is used.
[1] 1 pc LF 1350–3000 Cabinet width KB up to 600 mm
[2] Multi-stage adjustment

2 ☐■ Lever arm set



Cabinet height KH (mm)[1]	Colour	Part no
480–610	NI | ECS	22F3200
600–910		22F3500
840–1200		22F3900

Consisting of:
2 2 x Symmetrical lever arm
[1] Theoretical cabinet height TKH for asymmetrical fronts

3 ☐ Cover cap set



Colour	Material	Part no
SW | HGR | TGR	Nylon	22.8000

Consisting of:
3a 1 x Cover cap, left
3b 1 x Cover cap, right
3c 2 x Branding element, stamped with Blum logo IN-G

3 ■ Cover cap set for SERVO-DRIVE[1]



Colour	Material	Part no
SW | HGR | TGR	Nylon	23.8000

Consisting of:
3a 1 x **SERVO-DRIVE** cover cap, left
3b 1 x Cover cap, right
3c 2 x Branding element, stamped with Blum logo IN-G
3d 2 x **SERVO-DRIVE** switch
3e 6 x Blum distance bumper Ø 5 mm
[1] Observe market-specific product approval

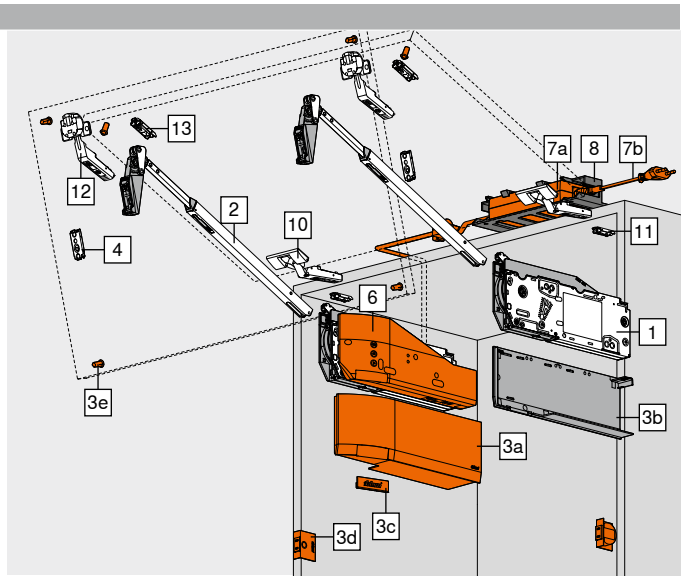

4 ☐■ Mounting plate for lever arm

Recommendation



Fixing method	Spacing (mm)	Colour	Part no
Screw-on [1]	0	NI | ONS	175H3100
EXPANDO			177H3100E
Knock-in			177H3100

All horizontal steel mounting plates with 0 mm spacing possible
[1] Use 2 chipboard screws (609.1x00) per side for wooden fronts
Use 2 counter sunk self tapping screws (660.0950) per side for wide alu frames

6 ■ SERVO-DRIVE set[1]



Colour	Material	Part no
TGR	Nylon	23.A000

Consisting of:
6a 1 x Drive unit
6b 1 x **SERVO-DRIVE** distribution cable, 1500 mm
6c 1 x Connecting node
6d 2 x Cable end protector
For three lift mechanisms or more, we recommend two synchronised drive units
[1] Observe market-specific product approval

8 ■ Power supply unit housing – wall fixing[1]



Colour	Material	Part no
WGR	Nylon	Z10NG120

Consisting of:
8 1 x Power supply unit housing – wall fixing
[1] For **SERVO-DRIVE** power supply unit

Colour		Colour	
ECS	Eclipse black	SW	Silk white
HGR	Light grey	SZ	Black
IN-G	In-mould brushed stainless steel	TGR	Deep grey
NI	Nickel plated	WGR	White grey
ONS	Onyx black	WS	White