MOVENTO with BLUMOTION – 760H | 766H – locking device feature

Web code – click on the code or enter it in the Product Configurator: DQCZ3Y

Planning

Space requirement in cabinet

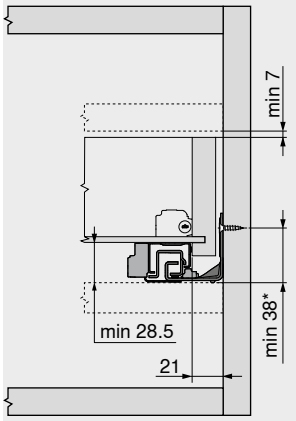

* +1 mm for assembly of the runners prior to cabinet assembly

Drawer | inner drawer

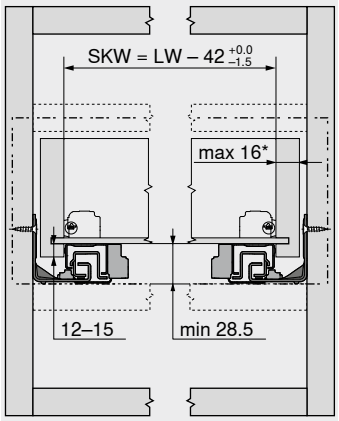

SKW Internal drawer width
LW Internal cabinet width
* Limited side adjustment for a drawer side panel thickness of 16 mm, but with full tolerance utilisation of the internal width of the drawer SKW

Drawer

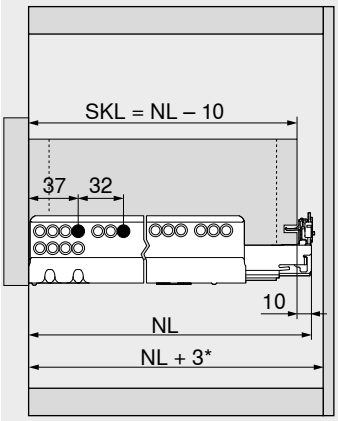

SKL Drawer length
NL Nominal length
* Additional +12 mm with side stabilisation

Inner drawer

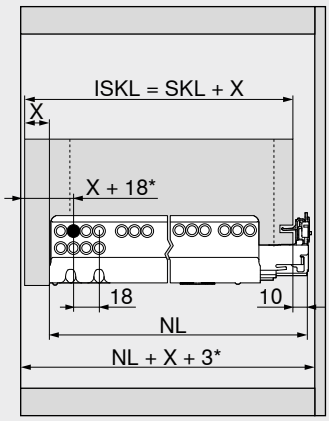

ISKL Inner drawer length
SKL Drawer length
NL Nominal length
X Front thickness
* Additional +3 mm with depth adjustment
* Additional +12 mm with side stabilisation

Drawer assembly

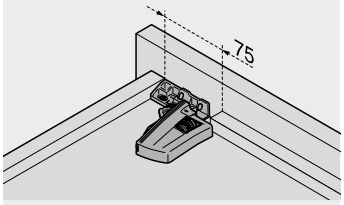

Use drilling template T65.1000.02

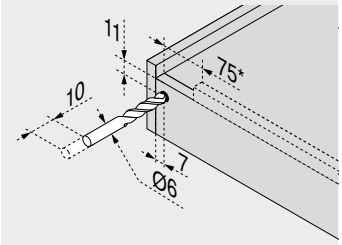

* 125 mm with **TIP-ON BLUMOTION**

Reference pages

Overview	419	Attachment of runners	440	**Assembly, removal and adjustment**	
SERVO-DRIVE for **MOVENTO** | **TANDEM**	478	Blum services	616		
TIP-ON BLUMOTION for **MOVENTO**	518	More technical details	724	Short URL	
TIP-ON for **MOVENTO** | **TANDEM**	522			www.blum.com/a410	
AMPEROS AC for **MOVENTO**	590				
CABLOXX	608				
Accessories	432				